Sound Sensor to Control Traffic System for Emergency Vehicles

P Kavipriya
Information Technology,
Sona College of Technology,
Salem, India
priyaprakash1825@gmail.com

S Kavin Sagar
Information Technology,
Sona College of Technology,
Salem, India
kavinsagar123@gmail.com

D Komalavalli
Information Technology,
Sona College of Technology,
Salem, India
komsdayalan@gmail.com

Abstract - Traffic Congestion is a serious issue in many densely populated cities. Especially during the passage of emergency vehicles in such congestions. This work mainly aims on providing a solution for the emergency faced by the ambulance during such traffic blocking. The implementation needs the usage of sound sensors and monitoring the ambulance to pass traffic signal lanes using Xbee protocol. Fire disaster management prevention can also be the further application of sound detecting sensors.

Index Terms - sound detector, sensors, traffic congestion, Xbee.

I. INTRODUCTION

The increase in human population is an important cause for the drastic increase in the usage of vehicles for transportation, which ultimately started being a reason for the hectic traffic jams in many of the densely populated cities. This congestion causes a delay for the transportation, which increases waiting time. When it comes to overcrowded cities these waiting times become comparatively higher, such higher waiting time for emergency vehicles causes a great impact. Hence, this idea proposes the smart traffic system by clearing jams for emergency vehicles like ambulances by providing green signals on the lane during heavy traffic. This method involves using two sensors for sound detection like Arduino UNO along with the LM393 platform and then uses Xbee protocol (which is a wireless communication protocol) like wi-fi, Bluetooth. The frequency of incoming ambulances is detected with the help of sensors, i.e. frequency of around 700Hz-900Hz. The sensors detect the threshold value of sound in decibels. Once and a while the frequency exceeds the threshold value, which indicates detection of ambulances, and the respective lane is made green providing the necessary delay for the passage of ambulances on the lane completely.

The rest of the paper is followed by related works, which describe the other work done on the traffic control system. Accompanied by a brief explanation of sound detector sensor, which is part of the implementation, and pattern recognition approach to the siren detection clearly explains the working principle of pattern recognition. The proposed work mentions the core functionality followed by implementations representing the execution of the idea. Pin configuration gives the digital design followed by concluding the idea proposed and mentioned the source referred to under references.

II. RELATED WORKS

Detecting the traffic and identifying the presence of emergency vehicles is made available, here the camera plays a major role in detecting the count of vehicles passing. Similarly, camera placement is a crucial step that involves the usage of certain calculations to find the suitable angle for fixing the camera and the optimum height of 25feet. These angles are calculated so that a certain distance is

covered and a clear-cut threshold line visible.

Formulas for Calibration of camera:

- Base angle=7° and rise=7.62
- Diagonal=7.62/sin(7)
- Top angle=(90°-7°)=83°
- Base= 7.62/tan(7)

Using image subtraction, the video is compared and finds moving blobs. Then these blobs are analyzed followed by tracking and counting the number of vehicles. If the count exceeds the threshold level the traffic density is estimated. For ambulance detection, the Bluetooth of the ambulance driver is connected which transmits data to the traffic signal and makes the lane green.

IR sensors are used to detect Traffic blocking, by placing them on the roads that find the length of the vehicle and duration of the signal to make way for emergency vehicles. The vehicle drivers are sent with necessary data and instructed to take alternate paths using GSM[7]. The IR sensor notices the volume and density of the traffic, which is controlled by the microcontroller named PIC also alters the transition slot. The magnitude of the emitted light the output voltage varies, IR radiation emitted by the LED travels towards the photodiode[8].

III. SOUND DETECTOR SENSOR

Detection of ambulances can be done in many instance methods the first idea is placing a special transmitter on each emergency vehicle to allow priority passage through intersections. The traffic light controllers at each intersection should be equipped with a receiver and these receivers receive the signal from the transmitter and thereupon regulates the flow of traffic. This method is relatively expensive, and manually actuating vehicles is needed.

The other method is using detectors to detect flashing lights on the traffic light controllers. This technique exhibits some cost and utility advantages since emergency vehicles are normally equipped with flashing lights that are actuated in emergencies. The cost becomes a disadvantage if the special light is detected with a traffic signal controller. There may be a case of false detection since any non-emergency vehicle has no restriction in the use of flashing lights. Hence those private vehicles may be actuated with flashlights. The other scenario also exists where the flashing lights are used in advertising, commercial window displays which may result in false triggers.

The better approach is utilizing the siren sound produced by the emergency vehicle. The cost advantage is conventional since these sirens are equipped in emergency vehicles. These sirens are not embedded in non-emergency vehicles and also these sirens are actuated only during emergency scenarios.

IV. PATTERN RECOGNITION APPROACH TO THE SIREN DETECTION

There exists a periodic alteration of frequency for the siren signal, which is characterized by a modulated-frequency waveform. The lower frequency spectral is dominant among many numbers of the harmonic spectral components. The periodic alteration of the frequency of this dominant component is visualized as a curve based on current frequency and time. Thus the curve generated is called FCC that is Frequency Characteristic Curve. The fig 1 and fig 2 represents the frequency characteristic curve of the siren and a filter-bank placed inside the dominant frequency range of a siren respectively[9].

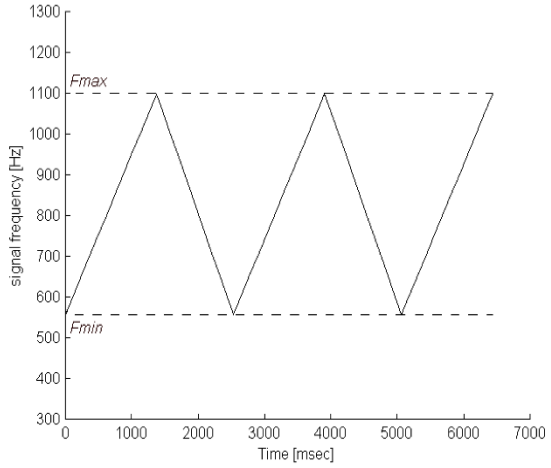

Fig.1 Frequency characteristic curve of the siren.

To identify the siren signal, few points that represent roughly on the frequency characteristic curve, are more than sufficient. Digital filter-bank of narrow band-pass filters is used to obtain those points. With the obtained points whose center frequencies are distributed in the spectral range from Fmin to Fmax.

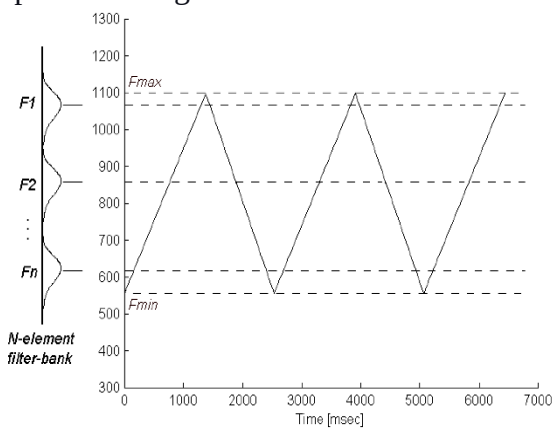

Fig.2 A filter-bank placed inside the dominant frequency range of a siren.

V. PROPOSED WORKS

This implementation of this system uses a sample of four cases where finding the solution ambulance passes through the two ways. The sensor 1 is placed at a distance of 100mts away from the traffic signal and the sensor2 is placed near the traffic lights.

If any ambulance gets detected, State 1 indicates that the ambulance is detected . If no ambulance is detected within the range, State 2 indicates that no ambulance is detected.

Table 1: Four cases for providing the solution for an ambulance heading towards the traffic signal for two ways

Sensor-1 state	**Sensor-2 state**	**Action**
0	0	No ambulance detected and normal traffic operation continues
1	0	An ambulance is detected at sensor1, make the signal green for 150s
0	1	An ambulance is detected at sensor2, continue the lane to be green for 5s
1	1	An ambulance is detected at both sensor1 and sensor2.

Table.1 Four cases involved in the process

VI. IMPLEMENTATION

The implementation includes two sound detecting sensors to detect the frequency of the heading ambulance. These two sensors are connected to an Arduino, hence two Arduino is connected to the sensors and Xbee, a wireless communication protocol is used to relate these two sensors. The first sensor is placed at a distance of 100mts away from the traffic signal and the second sensor is placed at traffic signals. Normal traffic lights operations continue when no ambulance is detected in Sensor1 and Sensor2.

When sensor1 is detected with an ambulance, the respective lane in which it is traveling is made green for a duration of 150 sec for the ambulance to reach sensor 2 which is placed at a traffic signal, and the remaining lane signals are made red. If

an ambulance is detected at sensor 2, the green signal for the respective lane where the ambulance is detected is continued with a delay of 5sec for the ambulance to pass the lane completely and the rest of the lanes remains red. When an ambulance is detected in both sensor1 and sensor 2 at the same time, the respective lane is made to green signal for a duration of 5 sec plus an extra 150 sec to make the ambulances pass the lane completely. After the ambulance passes the lane completely the traffic signal resumes its normal operations.

VII. PIN CONFIGURATION

Two Arduino boards are connected with the sensor 1 and sensor 2 respectively. The sensor has three pins namely Vcc pin which is connected to 5V supply of Arduino, ground pin connected to the ground terminal on the Arduino board, and pin 3 and 4 on Arduino 1 and Arduino 2 are connected to an output pin.

Pin 0 and 1 in the Arduino are connected to Xbee transceivers with the Tx and Rx terminal respectively. 3.3V supply of Xbee is given to the 5V supply of Arduino and the ground terminal is connected to the ground terminal of the Arduino board.The fig.3 and fig 4 shows the pin configuration of xbee protocol and arduino uno respectively[10].

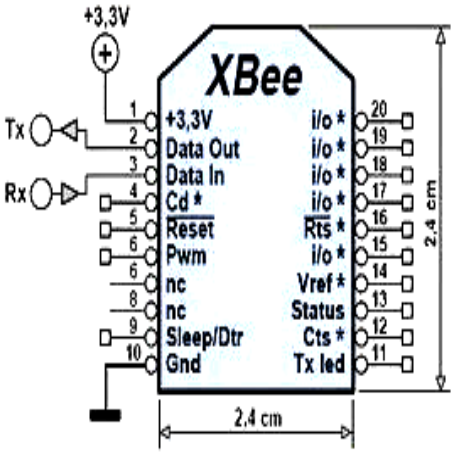

Fig.3 Xbee Pin configuration

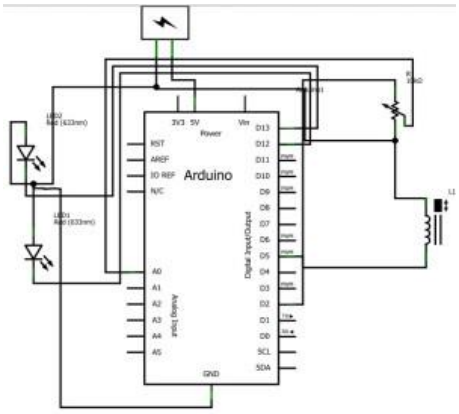

Fig.4 Arduino Pin configuration

VIII. CONCLUSION

The two sensors and Xbee protocol used in this method finds a solution for the existing problem, that is it avoids the waiting time for emergency vehicles in the traffic signals. This model serves as a better option when compared to the usage of other ambulance detecting methodologies, which are either expensive or not accurate in detecting the ambulance on the roads. Hence the utilization of the sound detectors is found to be more actuated since these siren sounds are used only during an emergency situation. The proposed system in the future may be improved and adds many emergency vehicles along with ambulances like a fire truck, police patrol, disaster management, etc and implementation of this system on many lanes of the traffic signal.

IX. REFERENCE

[1] "The Effect of IoT New Features on Security and Privacy: New Threats, Existing Solutions, and Challenges Yet to be Solved". IEEE Internet of Things Journal. **6** (2): 1606–1616 Zhou, Wei; Jia, Yan; Peng, Anni; Zhang, Liu, Peng (2019).

[2] Acharjya, D.P.; Ahmed, N.S.S. (2017).Recognizing Attacks in Wireless Sensor Network in View of IoT". In Acharjya, D.P.; Geetha, M.K. (eds.). Internet of Things: Novel Advances

and Envisioned Applications. Springer. pp. 149–50.

[3] Ujaley, Mohd (25 July 2018).”Cisco to Invest in Fiber Grid, Internet of Things, Smart Cities in Andhra Pradesh”.

[4] Kushalnagar, N.; Montenegro, G.; Schumacher, C. (August 2007). IPv6 over Low-Power Wireless Personal Area Networks (6LoWPANs): Overview, Assumptions, and Goals.

[5] "San Jose Implements Intel Technology for a Smarter City". *Intel Newsroom*. Retrieved 11 July 2014.

[6] M. Wijerathna Basnayaka, Chathuranga. "Internet of Things for Smart Cities".

[7] Shilpa S. Chavan, Dr. R. S. Deshpande & J. G. Rana (2009), Design of Intelligent Traffic Light Controller Using Embedded System Second International Conference on Emerging Trends in Engineering and Technology, pp 1086-1091.

[8] Bilal Ghazal, Khaled EIKhatib, Khaled Chahine, Mohamad Kherfan, Smart Traffic Light Control System, Third International Conference on Electrical, Electronics, Computer engineering and their Applications,2016.

[9] A Siren Detection System based on Mechanical Resonant Filters by Dimitris K. Fragoulis andJohn N. Avaritsiotis

[10] Xbee and Arduino, “Building Wireless Sensor Networks: with ZigBee, XBee, Arduino, and Processing 1st Edition”, by Robert Faludi.