Remote health monitoring for elder patients using wearable sensors

UmaMaheswari.K
Electronics and Communication Engineering
SRM TRP Engineering College, Trichy, Tamilnadu, India
umaragsug@gmail.com

Shrichandran.GV
Master of Computer Applications
SRM Institute of Science and Technology, Ramapuram Campus
Chennai-89
gvshrichandran@gmail.com

Mirunalini,B
Electronics and Communication Engineering
SRM TRP Engineering College, Trichy, Tamilnadu, India
mirunalinisakayaraj@gmail.com

Abstract— Life expectancy in maximum nations has been growing constantly over the numerous few spans a way to substantial enhancements in medicine, public fitness, in addition to non-public and environmental hygiene. However, expanded lifestyles expectancy mixed with falling beginning costs are predicted to engender a massive growing old demographic withinside the close to destiny that could impose full-size burdens at the socio-financial shape of those nations. Therefore, it's miles vital to develop value-powerful, easy-to-use structures for the sake of aged healthcare and well-being. Remote fitness tracking, primarily based totally on non-invasive and wearable sensors, actuators and contemporary-day communication and statistics technology gives a green and reasonable result that permits the aged to retain to stay of their homey domestic surroundings rather than high-priced healthcare facilities. These structures may also permit healthcare workers to screen essential physiological symptoms and symptoms of their sufferers in actual time, investigate fitness situations and offer comments from remote facilities. Internet of things (IoT) visualizes the way forward in solving in problem of medical aid for something anyplace by anyone at any time. So as realize pervasive healthcare system a foreign healthcare monitoring is important. Multiple physical signs like electrocardiogram (ECG), heart rate, blood pressure, blood glucose, arterial oxygen saturation (SpO2) with patient's location is designed to be sampled at different rates continuously using IoT with live Global Positioning System (GPS) location tracking system. The patient data recorded on remote measurement is compared with clinical trials.

Keywords— IoT (Internet of Things), patient monitoring, data acquisition, heartbeat sensor, electrocardiogram (ECG) sensor, SpO_2 sensor, blood pressure sensor, blood glucose, Global positioning system (GPS) and Global system for mobile communication (GSM).

I. INTRODUCTION

In the new years remote innovation has expanding for the need of maintaining different areas. In these new years, IoT [1] dazzled the chief of business region uncommonly robotization and control. Biomedical is one among ongoing pattern to supply better medical services. In medical clinics as well as the private medical care offices are opened by the IoT innovation [3]. So having a reasonable framework different boundaries are seen that burns-through force, cost and increment effectiveness .In customary technique, doctor assume a vital part in checking old individuals. For this interaction, heaps of time is needed for enlistment, arrangement at that point observing. Likewise reports are created later, the report assortment and discussion requires two days for finding. To forestall this protracted interaction working individuals will in general disregard the observing or defer it if their wellbeing isn't fit. This contemporary methodology decreases time utilization inside the interaction.

As per this shrewd framework, Medical researchers attempt inside the field of advancement and examination since numerous a very long time to ask better wellbeing administrations and satisfaction in living souls. Their commitment in clinical region is critical to us and can't be ignored. The present network structures have the premise thoughts coming from the previous fundamentals. Far off checking, additionally alluded to as self-observing/testing, empowers clinical experts to watch a patient distantly utilizing different innovative gadgets. This strategy is basically utilized for overseeing ongoing illnesses or explicit conditions, similar to heart condition, diabetes mellitus, or asthma. These administrations can give practically identical wellbeing results to conventional in-person understanding experiences, supply more prominent fulfillment to patients, and ought to be financially savvy. In far off observing, sensors are important to catch and communicate biometric information, for example , a tele-EEG [2] gadget screens the electrical movement of a patient's mind at that point sends that information to a subject matter expert. This may be cleared out either ongoing [3] or the data may be put away at that point sent. This paper centers around how the android application is utilized to send the patient's boundaries to the worker [4]. Additionally helps the patient simply if there should be an occurrence of crisis by producing a ready when the edge esteems are crossed.

II. EXISTING SYSTEM

The present situation utilized for patient observing is that the fixed checking framework which might be utilized just the patient is on bed. The accessible frameworks are tremendous in size and just accessible inside the emergency clinics in Intensive Care Unit (ICU). Presently a-days numerous frameworks for nonstop observing of the patient are accessible. Be that as it may, the weakness in existing framework patient should be hospitalized. Normal checking of patient is preposterous once the patient is released from emergency clinic. These frameworks can't be utilized in singular level for homegrown drug. Existing frameworks are massive in size and their upkeep and cost is excessively high. The vast majority of the common frameworks [5] utilize wired correspondence which is simply excessively dreary for significant distance interchanges. They are not effectively carried out when patient is mobile.

III. PROPOSED SYSTEM

Our frameworks will be advantageous to all or any time of people particularly for the old matured or Intensive Care

Unit(ICU) patient. The gadget will quantify the heartbeat, electrocardiogram(ECG) [6], blood vessel oxygen saturation(SpO2), heartbeat and glucose of the patient and transfer the end in the instant message, web worker and versatile applications. Thusly, we have created site likewise as versatile applications during which individuals can get access and see the yield via looking through date and time. Besides, simply if there should be an occurrence of crisis, medical caretaker or patient's relative examine patient's condition by utilizing live screen choice. Our objective was to make a framework with high exactness with least expense all together that anybody can utilize and manage the cost of this framework.

Patients, guardians, specialists, clinical research centers, facilities and emergency clinics, orderlies, medical attendants, and public specialists were the fundamental players. On the off chance that medical services data is needed for affirmation and approval of any legitimate approving or reviewing, the overall population specialists are included. It assists you with gathering patient data and store it in the cloud utilizing IoT [7]. Cloud is accepted for its consistent data stockpiling of advanced data. The data will be shared to various clients all at once. The physical environment should be in excellent working order. The cloud server is also responsible for the protection of the data [8]. Cloud service providers are responsible for ensuring that information is still available on the market and that it is accessible from any place. The physical environment [9] should be in excellent working order. The hosting company also looks after the security of the information. This information can be read by the users at any time [10]. The patient is followed in this paper utilizing IoT gadgets with different sensors, and their data is put away in the cloud. With the exception of the patient, every entertainer is given a special RFID-empowered identifier . It's mandatory for the patient, specialist and in this manner the visitors to embrace to have the enlistment introductory. The emergency clinic the board can likewise get to the cloud subtleties by got patient id. The enlistment part comprises of subtleties like client name, email address, contact range. Once after enlistment, the clients are having the opportunity to be outfitted with ID. The ceaseless watching framework screens the information anyway it isn't shown on the observed till the verified patient logs in ID for distinguishing proof. The doctor enters the patients then the patient's subtleties like electrocardiogram(ECG), heart beat, SpO2 , beat, essential sign and blood glucose is shown on the screen. Likewise, the specialist's subtleties like name, login subtleties square measure hang on inside the information. The time, the specialist leaves the world is moreover hang on inside the information. This assists client with knowing the sum the doctor spent for a patient.

IV. METHODOLOGY

The sensors are interfaced with the Arduino and it senses the parameter from the body by sensor network [11]. The amount is set for every parameter and if it varies from the fixed limit it sends the alert message to the concerned physician and their belongings. The readings are continuously recorded and data's are stored through IoT module via Cayenne application. It's ready to view all the small print of the patients within the application and normal message is send via GSM module. Fig 1 shows the proposed organization structure .The health observing sensors are utilized to gather health related information for information securing data. Correspondence should be possible by regulator for sending information on web through the cloud. Information handling has been done at server. All information gathered and accumulated at server point [10]. To get health related data in justifiable organization it tends to be appeared on site page.

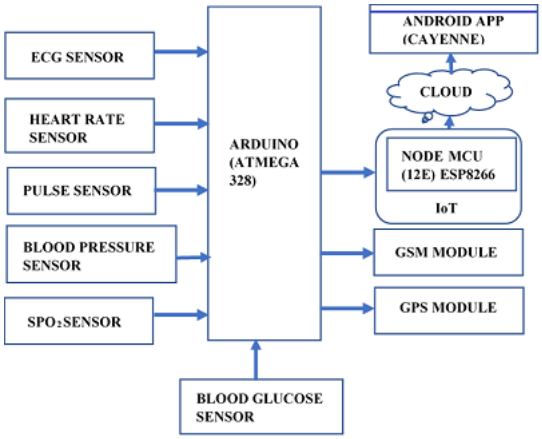

Fig.1 Remote Health monitoring System.

V. RESULTS AND DISCUSSION

The results are for instance that each one the modules are operating correctly with none data loss and every sub-module altogether modules are performing their function. The modules are extracting the accurate data and ready to send the info to the Arduino. The Wi-Fi module which is additionally a near by sensing module must send the values to the server with none delay and with none data loss. The cloud server must store all the info sent by the Wi-Fi module and disclose the info to the Cayenne application [12,13].

A. EXPERIMENTAL SETUP

After checking all the pin connections and adding the library files to the Arduino IDE and uploading the source code, run the code.

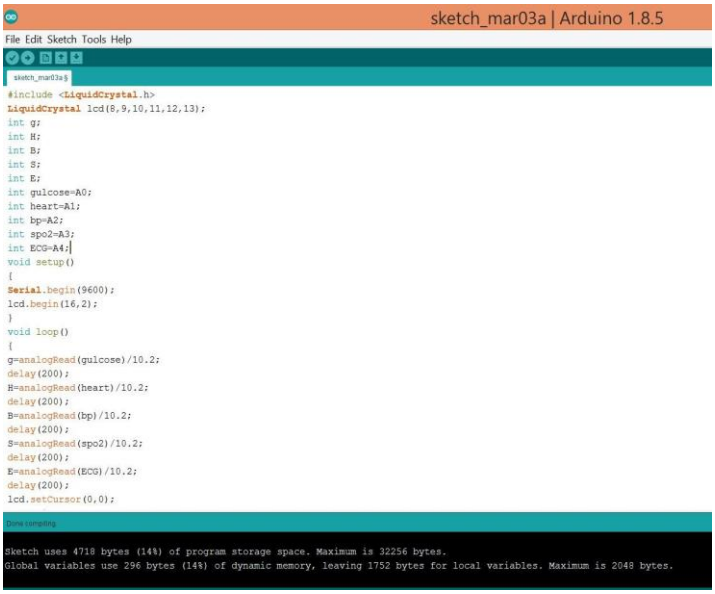

Fig 2. Installation of remote health monitoring system

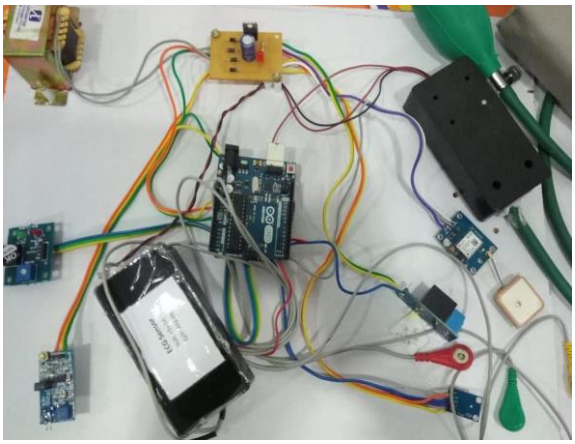

Fig.3 Simulation of program code on Arduino IDE

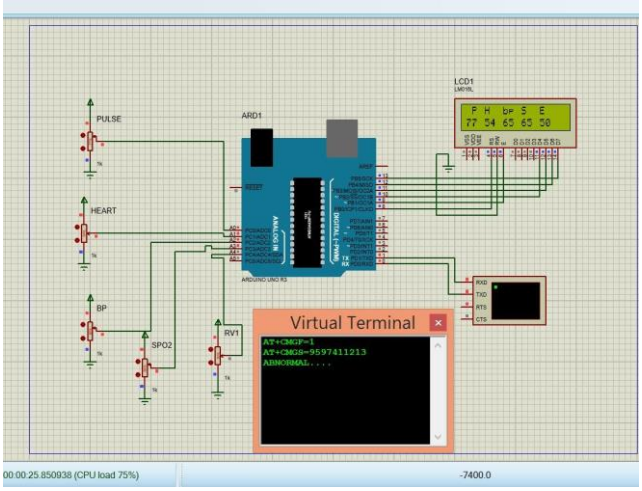

Fig.4 Simulation of prototype in Proteus

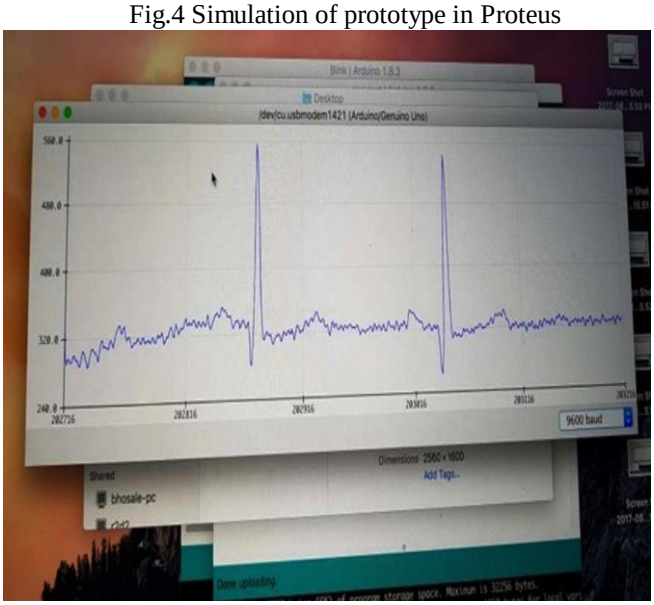

Fig.5 ECG waveform of a patient

The records of the patients are very critical because they involve the life risk, pertaining health on stake. So if any of the records get missed then it means a loss of health leading to mortality. Therefore, the proposed system is offering area memory storage in order that if there's any chance to disconnection of the medium of transmission then the information is stored within the local memory of the system like mobile. So whenever the connection get stabled then the batch will the sent to the CMS and can be get stored within the system.

Highlights of our project are as follows:

a. Highly smaller compact.
b. Low power utilization.
c. An alert will be raised when limit esteems are crossed.
d. In instance of crisis patient can be followed through GPS.
e. Real time checking of patient's fundamental boundaries like heartbeat, ECG, pulse, SpO2 and blood glucose.

Table 1 Tabulation of clinical values

S.NO	PATIENT	AGE	BLOOD PRESSURE	BLOOD GLUCOSE	SPO2	HEART BEAT
1	PATIENT1	52	120/83	78/140	96	92
2	PATIENT2	51	124/98	79/141	92	92
3	PATIENT3	70	134/98	84/134	92	89
4	PATIENT4	67	154/89	87/151	92	98
5	PATIENT5	54	134/80	81/142	92	92
6	PATIENT6	56	134/98	80/135	92	98
7	PATIENT 7	86	117/98	75/138	92	90
8	PATIENT 8	65	134/108	73/132	94	95
9	PATIENT 9	77	76/98	85/140	95	89
10	PATIENT 10	43	134/98	70/120	97	85
11	PATIENT 11	27	120/80	72/110	94	95
12	PATIENT 12	32	134/98	75/138	95	92
13	PATIENT 13	45	134/98	71/115	92	98
14	PATIENT 14	52	124/112	72/110	89	96
15	PATIENT 15	72	134/112	98/126	76	83
16	PATIENT 16	83	124/111	81/142	96	80
17	PATIENT 17	48	134/98	84/134	95	85
18	PATIENT 18	60	134/98	89/138	89	81
19	PATIENT 19	35	132/97	92/148	91	92
20	PATIENT 20	43	124/81	86/128	93	90

Table 2 Tabulation of measured values

S.NO	PATIENT	AGE	BLOOD PRESSURE	BLOOD GLUCOSE	SPO2	HEART BEAT
1	PATIENT1	52	129/87	89/139	95	91
2	PATIENT2	51	128/98	84/132	91	96
3	PATIENT3	70	128/99	87/137	92	87
4	PATIENT4	67	145/102	90/156	93	96
5	PATIENT5	54	138/98	86/147	94	95
6	PATIENT6	56	118/84	83/140	95	96
7	PATIENT 7	86	118/87	80/141	96	94
8	PATIENT 8	65	139/104	76/139	96	97
9	PATIENT 9	77	78/99	88/144	94	87
10	PATIENT 10	43	138/96	74/125	98	87
11	PATIENT 11	27	121/81	75/113	96	97
12	PATIENT 12	32	134/101	80/141	92	91
13	PATIENT 13	45	132/99	74/120	91	96
14	PATIENT 14	52	128/110	75/113	90	95
15	PATIENT 15	72	134/111	99/134	78	87
16	PATIENT 16	83	128/112	86/147	95	85
17	PATIENT 17	48	134/93	87/137	96	87
18	PATIENT 18	60	138/94	90/145	90	87
19	PATIENT 19	35	131/96	93/147	93	94
20	PATIENT 20	43	125/82	87/130	96	94

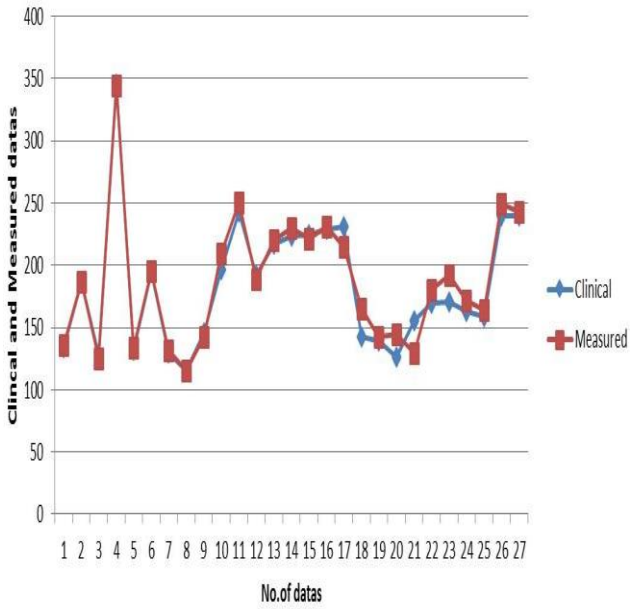

Fig 6. Comparison of in-vivo and non-invasive methods

The patient data of in-vivo measurements of pulse, heart beat, ECG, SpO2 and blood glucose measurement is compared with the remote monitoring recorded data. Therefore, fig.6 depicts the accuracy of the remote monitoring data in closeness to the clinical result.

VI. Conclusion

This paper gives the layout and improvement of an IoT device for the remote tracking of aged human beings dwelling in nursing homes, via a cell utility and a wearable device. The layout changed into primarily based totally on a contextual observe in geriatric residences, wherein semi-structured interviews have been implemented to the health care professionals liable for the care of the aged. IoT based medical care stage which associates with keen sensors connect with actual body for wellbeing observing for every day checking. In this paper, we examined about IoT based patient checking framework utilizing arising innovations empowered by advanced cells or devices henceforth has more benefits, faces difficulties and openings. Checking old individuals gadget can be manufactured and advertised at a compelling expense.

Acknowledgment

The research was carried out in Department of Electronics and Communication Trichy, Tamil Nadu, India. We express our gratitude to our management, faculty and research scholars in SRM TRP Engineering College, Trichy, Tamil Nadu, India, who provided skill and proficiency that completely helped in the algorithm framing for monitoring elderly people. We are very grateful to Trichy SRM Medical College Hospital & Research Centre, Tiruchirappalli for providing the insights on elderly patients.

References

[1] J. H. Abawajy and M. M. Hassan, "Federated Internet of Things and Cloud Computing Pervasive Patient Health Monitoring System," *in* IEEE Communications Magazine, vol. 55, no. 1, pp. 48-53, January 2017, doi: 10.1109/MCOM.2017.1600374CM.

[2] E. Nemati, M. J. Deen and T. Mondal, "A wireless wearable ECG sensor for long-term applications," in IEEE Communications Magazine, vol. 50, no. 1, pp. 36-43, January 2012, doi: 10.1109/MCOM.2012.6122530.

[3] Kakria P, Tripathi NK, Kitipawang P. A Real-Time Health Monitoring System for Remote Cardiac Patients Using Smartphone and Wearable Sensors. Int J Telemed Appl. 2015;2015:373474. doi: 10.1155/2015/373474. Epub 2015 Dec 15. PMID: 26788055; PMCID: PMC4692989.

[4] P. Castillejo, J. Martinez, J. Rodriguez-Molina and A. Cuerva, "Integration of wearable devices in a wireless sensor network for an E-health application," in IEEE Wireless Communications, vol. 20, no. 4, pp. 38-49, August 2013, doi: 10.1109/MWC.2013.6590049.

[5] Majumder S, Mondal T, Deen MJ. Wearable Sensors for Remote Health Monitoring. Sensors. 2017; 17(1):130. https://doi.org/10.3390/s17010130

[6] Deen, M.J. Information and communications technologies for elderly ubiquitous healthcare in a smart home. Pers Ubiquit Comput **19,** 573–599 (2015). https://doi.org/10.1007/s00779-015-0856-x

[7] Aktas, F., Ceken, C. & Erdemli, Y.E. IoT-Based Healthcare Framework for Biomedical Applications. J. Med. Biol. Eng. **38,** 966–979 (2018). https://doi.org/10.1007/s40846-017-0349-7

[8] Min Woo Woo, JongWhi Lee, and KeeHyun Park. 2018. A reliable IoT system for Personal Healthcare Devices. Future Gener. Comput. Syst. 78, P2 (January 2018), 626–640. DOI:https://doi.org/10.1016/j.future.2017.04.004

[9] Durán-Vega, L.A.; Santana-Mancilla, P.C.; Buenrostro-Mariscal, R.; Contreras-Castillo, J.; Anido-Rifón, L.E.; García-Ruiz, M.A.; Montesinos-López, O.A.; Estrada-González, F. An IoT System for Remote Health Monitoring in Elderly Adults through a Wearable Device and Mobile Application. *Geriatrics* **2019**, *4*, 34. https://doi.org/10.3390/geriatrics4020034

[10] Santana-Mancilla PC, Anido-Rifón LE. The Technology Acceptance of a TV Platform for the Elderly Living Alone or in Public Nursing Homes. Int J Environ Res Public Health. 2017 Jun 8;14(6):617. doi: 10.3390/ijerph14060617. PMID: 28594386; PMCID: PMC5486303.

[11] C. F. Pasluosta, H. Gassner, J. Winkler, J. Klucken and B. M. Eskofier, "An Emerging Era in the Management of Parkinson's Disease: Wearable Technologies and the Internet of Things," in IEEE Journal of Biomedical and Health Informatics, vol. 19, no. 6, pp. 1873-1881, Nov. 2015, doi: 10.1109/JBHI.2015.2461555.

[12] Wan, J., A. A. H. Al-awlaqi, M., Li, M. *et al.* Wearable IoT enabled real-time health monitoring system. J Wireless Com Network 2018, 298 (2018). https://doi.org/10.1186/s13638-018-1308-x

[13] Varatharajan, R., Manogaran, G., Priyan, M.K. *et al.* Wearable sensor devices for early detection of Alzheimer disease using dynamic time warping algorithm. *Cluster Comput* **21,** 681–690 (2018). https://doi.org/10.1007/s10586-017-0977-2